ISLAMIC WOMEN DEFINE 'BEAUTIFUL': ANALYSIS OF SOCIO SEMIOTICS *PONDS WHITE BEAUTY FACIAL FOAM* AND *PONDS BODY LOTION* IN ADVERTISING

Susi Herti Afriani

ABSTRACT

This paper is intended to answer whether or not Ponds advertisement as a form of communication which full of meaning, and describe the form and function of meaning in advertising Ponds White Beauty Facial Foam and Ponds Body Lotion on television, as well as describes how Islamic Women defines a concept of "beautiful". The data in this study is taken from the speech models and narrator advertisement within the advertising of Ponds White Beauty Facial Foam and Ponds Body Lotion on television. How the data processing are: (1); researchers watched the advertising several times, (2) researcher captured images and transcribed speech to the records, (3), researcher noted the things that support the analysis of data (images, movement, situation), (4) researchers classified types of data, (5) analyzed the data based on the theoretical framework. Ponds Advertisement is a form of communication which full of meaning. The form and function of meaning in advertising Ponds White Beauty Facial Foam and Ponds Body Lotion on television portrayed through ideas, language advertisements, and purpose. "Beautiful" in this advertisement are women who have white skin and use all kinds of products Ponds either face moisturizer, face cleanser, moisturizer and a flattened body to toe white. Manufacturers build an image to form a consumer (especially women) living in the physical standards. Television through Ponds advertisement treats as a commodity, and serves as a commercial institution that supports the main idea of capitalism (selling all kinds of products Ponds) to conceptualize the production and reproduction. That is, Ponds do not provide information to consumers in order to make the best choice, but promote their own products in a "beautiful", with the memorable slogan viewers that the first step to whiter skin, the product; Ponds White Beauty Facial Foam. Ponds advertising functions that contribute to the community to spread the idea that women were black or dark brown really need Ponds products to be "beautiful", and in this case, television plays a major role in distorting the facts in order to make consumers interested in advertising Ponds.

digilib.uinsby.ac.id digilib.uinsby.ac.id digilib.uinsby.ac.id digilib.uinsby.ac.id digilib.uinsby.ac.id digilib.uinsby.ac.id digilib.uinsby.ac.id

Keywords: *Islamic Women, "Beautiful"; Ponds White Beauty Facial Foam; Ponds Body Lotion; Skin Whitening; Advertisement; Ideational Meaning, Interpersonal Meaning and Textual Meaning*

A. Preliminary

In an effort to care for beauty, women are usually "loyal" to a product. Beauty products include facial and body treatments, whether it is soap, shampoo, lipstick, mask, and a facial moisturizer. Consideration and determination by consuming beauty products, which could not be separated from the part on television advertisement. Manufacturers introduced products through creative advertising itself. He was on television has the "power" to communicate its products. The shape is varied and very interesting, too stunning visual creativity and effective. In a duration of 30 seconds and a minute producers as sellers can influence viewers with an advertisement impressions and language, which are "beautiful".

The skin whitening advertisements bombard us with images of white, and the results are remarkable every day. Trend "white image" through advertisement is able to associate thoughts into a form that is more varied with the level of visual interest to the game, especially when it taken in by the advertising of face bleach products. Now, almost all white image market, with an intelligent and creative visualization. In the context of skin whitening, it could mean that consumers are given information that white is beautiful, so continuously that reality is not really necessary anymore (Reuters, February 2001), meaning that manufacturers with very "clever" constructs incorporate “white” into the minds of television viewers. Actually, cosmetics advertisement is regulated in Decree No. Permenkes. 386/1994 prohibiting the depiction as if it may affect the physiological and or metabolism, also are prohibited from using words treat, cure or other words that convey the same as if to treat a disease. The problem in advertising skin whitening, although the language is not against the rules, perceptions generated, making as if the product has a therapeutic effect, in this case the therapy "to be white" (Kompas, May 2001)

In Indonesia, trend of whitening facial adevrtisemnt, which is called *Ponds* got quite a bit of attention, as evidenced by the award given by Citra Pariwara as Brand Award for 3 consecutive years. Creativity advertisers see from the images, sounds, situations, and language that created the advertisement. Here, the manufacturer was able to see the target *Ponds* advertisement, the woman is "beautiful", which was perceived that the beautiful means having white skin, and is capable of making beautiful face bleach *Ponds*. In general, advertising is a promotional tool for the sale of goods and services through mass media (Purwantari 1998: 39). In the era of the 1990s, when the development of the advertising is increasingly becoming private television sprung, so it

digilib.uinsby.ac.id digilib.uinsby.ac.id digilib.uinsby.ac.id digilib.uinsby.ac.id digilib.uinsby.ac.id digilib.uinsby.ac.id digilib.uinsby.ac.id

becomes "fine cuisine" for advertisers. Here, advertising affects people in two ways. First, as an instrument of marketing communication, advertising works to sell products, services and ideas through persuasion. Second, as a form of social communication, advertisement offering a message to the community, helping us to shape and understand our social world (Krugman ed 1994: 37-38). Furthermore, advertising is not only has an economic power, but also has the power and a cultural significance. It is clearly that there is no doubt that television as a medium for advertisers is the fastest medium in conveying advertising messages communicatively. However, if the *Ponds* advertisement aims to help consumers in selecting products or just made solely in the interest of producers is a separate issue, which deals with the meaning of advertising *Ponds*. Based on the explanation above, the problems in this study are (1) Is it true that *Ponds* advertisement is a form of communication which full of meaning?; (2) What is the form and function of the meanings is realized in society?; and (3) How Islamic Women defines "beautiful" in *Ponds White Beauty Facial Foam* advertisement and *Ponds Body Lotion* on television?. To answer these problems, the purpose of this study is described as follows: (1) This paper is intended to answer whether or not *Ponds* advertisement as a form of communication which full of meaning; (2) Describe the form and function of meaning in *Ponds White Beauty Facial Foam* and *Ponds Body Lotion* advertisement on television, and (3) describe Islamic Women defines "beautiful" in *Ponds White Beauty Facial Foam* and *Ponds Body Lotion* advertisement on television. The data in this study is taken from the speech models and narrator ad within the ad *Ponds White Beauty Facial Foam* and *Ponds Body Lotion* on television. How the data processing are: (1); researcher watched the advertisement over and over again, (2); researcher captured images and transcribed speech into the record, (3); researcher noted the things that support the analysis of data (images, motion situation) (4); researcher classified types of data (5), analyzed data based on the theoretical framework.

B. Theoritical Framework

2.1. Communication and Discourse Analysis Early models of communication comes from the perspective of the communication process as a form of communication model of Shannon and Weaver.

digilib.uinsby.ac.id digilib.uinsby.ac.id digilib.uinsby.ac.id digilib.uinsby.ac.id digilib.uinsby.ac.id digilib.uinsby.ac.id digilib.uinsby.ac.id

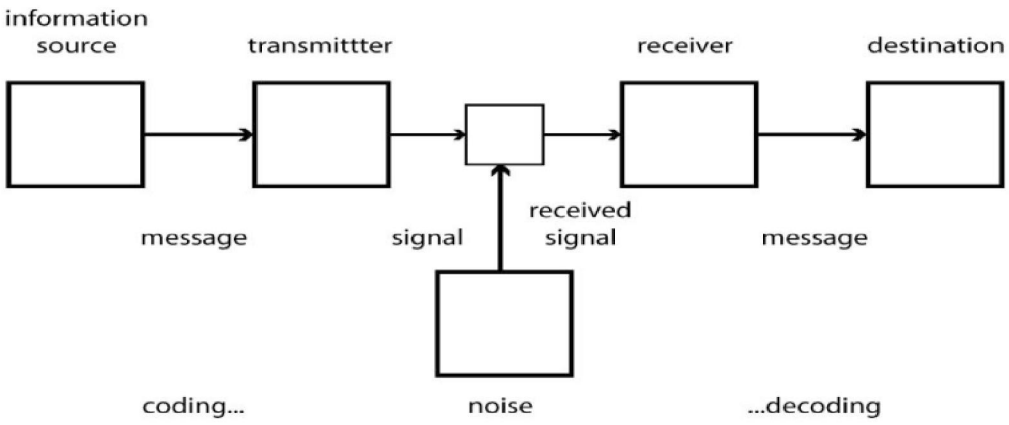

Figure 1. Shannon and Weaver's General Communication Model (Renkema 2004: 40)

The above model is called one of the basic models in a science communication, which describes the communication process as a simple and linear process from one point to another. Renkema (2004: 40-41) describes the communication model above as follows: in the information source (source of information), a message chosen or selected. It consists of written or spoken language, images, music and so on. The transmitter encodes the message in a signal that is sent through a communication channel to the receiver (receiver). The receiver translates the signals into the message, encodes the message and sends this message to (destination). The important thing in communication theory is that the message is encoded into words. It is then distributed through a channel of communication, voice, paper, screen, and then to the receiver. The receiver encodes the message, and the message to the final destination, the mind reader or audience.

The other theory which helps this analysis is called discourse analysis. Discourse analysis is the science that aimed to investigate the relationship between form and function (Renkema, 2004: 1). That is, discourse refers to the complexity of aspects formed by the interaction between the linguistic aspects of the text, as embodied in the outer aspect of language (Aminuddin 2002: 37). Aminuddin added that the interaction is, in addition to determining the characteristics of this form of communication or the use of language also serves to determine the meaning of a text, which is also influenced by elements outside the language of the participants, purpose and context. In linguistics, context include: (1) the context of the speech, a context substitutions such situations, the medium used, the location, the persona and the conditions that allow for substitutions, (2) cultural context, and (3) a reference to the context of the conversation context (Aminuddin 2002: 38).

digilib.uinsby.ac.id digilib.uinsby.ac.id digilib.uinsby.ac.id digilib.uinsby.ac.id digilib.uinsby.ac.id digilib.uinsby.ac.id digilib.uinsby.ac.id

Meanwhile, Cook (2001: 3) explains that discourse analysis is also talking about the context of the communication, not only with the language itself: who and with whom speakers communicate and why; kind of what people and situations how, through what medium, how the difference types and actions including communication and relations with each other. So Cook concluded what was said about the discourse, particularly discourse of advertising is a combination of text (linguistic form) and context (substance; music and pictures; paralanguage; situation; co-text; intertext; Participants; function) (2001: 4).

2.2.Meaning Production in Advertising

Stuart Hall in his book The rediscovery of 'ideology' said that the meaning or image appearing in an advertisement is not something granted, but it is the result of a particular way of constructing reality. Furthermore, he argued that the definition of reality is produced through practices of linguistic and visual, in which the practices are definitions of reality are selectively represented. In connection with reality constructed by advertising, Rymond William (1993) in Bungin (2000) say that television advertising has become the magic system. While Piliang (1998) argue that the social reality in television advertising has been reinforce your power as something real going on called hiperrealitas.

Bungin (2000) says that in addition to categorization of meaning encoded by viewers in different social classes, the meaning of which has been encoded by viewers, is also associated with the image created by the copywriter in the advertisement. Furthermore, the encoding process by viewers using an arbitrary interpretation of the meaning encoded so that will vary. In addition, Emphasis will be the interpretation of the advertising done by Purwantari with his opinion that the events in the real world do not contain their own meaning an integral and intrinsic which is then transferred through language. Rather, the meaning is a production and social practice in which the language and symbolism is a tool that allows meanings produced.

2.3. Discourse Aspect Meaning

This study will be examined through theory Halliday and Hasan theory (1985) as quoted by Renkema (2004: 46) through a socio-semiotic approach. They describe three aspects of the social context, namely: (1) field, (2) tenor, and (3) mode. These concepts allow to interpret the social context of a discourse, in which the meaning is sometimes altered. A field is a field of discourse refers to what happened and the nature of social action that occurred, particularly participants answered questions about what is included in it. It can be seen from the features of the language. In general, the contents of the field is what's discourse. Field refers to the core meaning of a discourse and social action that occurs as well reference refers to the institutional (Renkema, 2004: 46). In a

digilib.uinsby.ac.id digilib.uinsby.ac.id digilib.uinsby.ac.id digilib.uinsby.ac.id digilib.uinsby.ac.id digilib.uinsby.ac.id digilib.uinsby.ac.id

sense dircourse aspect, field is called an ideational meaning (the meaning of the idea and then I called), called Aminuddin (2002: 41) as the ideational function, the function of language to express "something" as represented speakers. Aminuddin added that the linguistic meaning of the symbol is not only shaped by the linguistic aspects, but also by the view of the language user in perceiving the world and abstract linguistic symbol which is referenced.

Furthermore, tenor is a discourse that refers to who is taking part in the discourse, the nature of the participants, referring to the status and role in the discourse (Renkema, 2004: 46). Tenor describes the relationship that exists between participants. How can analyze it through the "power" and "social status", which can be seen through the vertical relationship (low high social status), and horizontal relationships (far or close solidarity). Mode refers to the part where the language plays in it and for what participants hope to do the language in the situation. In additon, mode is the symbolic organization of the text. Status, and its function in the context, including the channel (oral, written, or a combination of both) as well as rhetorical mode (Renkema, 2004: 47), so it is talking about the superstructure mode, purpose and function. These three aspects of the social context is related to three aspects of discourse: (1) ideational, (2) interpersonal, and (3) textual (Renkema, 2004: 47). Renkema further said that the meaning associated with the discourse to the context. Relations between discourse and context for semantic level of semiotics. Let's look at the chart below to see the relationship between the components of a context to the situation of the aspects of discourse meaning.

Situational Component	**Discourse Aspect**
Field	*Ideational meaning*
Tenor	*Interpersonal meaning*
Mode	*Textual meaning*

Tabel 1. ***Key concepts in functional grammar***

From the table (1) above, it appears that the meaning of the idea of a discourse related to the field components of a context situation. This means, the content of discourse refers to what happens in a particular situation or a particular topic. Ideational meaning should be able to answer the talk whether discourse (Renkema, 2004: 47). Meanwhile, Renkema (2004: 47) says that the meaning of interpersonal discourse related to tenor, and can be recognized by the participants in the discourse of how to use language to act. For example, the use of the type of job can mean someone has the "power" to give instruction. The last aspect of discourse in table (1) is a textual meanings associated

digilib.uinsby.ac.id digilib.uinsby.ac.id digilib.uinsby.ac.id digilib.uinsby.ac.id digilib.uinsby.ac.id digilib.uinsby.ac.id digilib.uinsby.ac.id

with fashion. Textual meaning is meant here is the organization of the content elements within a larger structure, for example, where the perspective on a topic related to the technique of putting the information in a prominent place. There are two kinds of advertisement that will be analyzed. The first advertisement is *Ponds* version a model on playing tennis, and I called Advertisement of Ponds "Tennis Version"

3.DataAnalysis

3.1Advertisement of Ponds "Tennis Version"

Advertisement on *Ponds tennis version* is the latest ad from *Ponds,* aired in 2006, which featured two women, which were practicing playing tennis to win a competition sport tennis international scale (the picture shows the Wimbledon stadium; the headquarters of the All England Lawn Tennis and Croquet Club in the London suburb of Wimbledon). The first woman (here in after researcher called a black model, meaning dark or brown typical of Indonesia) noted that his co-star (here in after referred to as the second female white model) whiter skinned than her. After transcribing, "linguistic message" of *Ponds Tennis Version* television advertisement can be read as follows:

digilib.uinsby.ac.id digilib.uinsby.ac.id digilib.uinsby.ac.id digilib.uinsby.ac.id digilib.uinsby.ac.id digilib.uinsby.ac.id digilib.uinsby.ac.id

Mainnya makin bagus..., wajahnya tampak makin putih...(narator iklan) karena ia memakai *Ponds Moisturizer* dan juga *Ponds Facial Foam,* yang mengandung Vitamin B3 untuk membantu Ponds Mousturizer lebih meresap ke dalam kulit agar tampak lebih putih. Langkah awal untuk kulit wajah tampak lebih putih...*Ponds White* (she is playing better ..., her face looked whiter ..., (ad narrator) because she was wearing *Ponds Moisturizer* and *Facial Foam*, which contain Vitamin B3 to help *Ponds Mousturizer* more absorbed into the skin to appear whiter. The first step to whiter skin ... *Ponds White Beauty Facial Foam).*

In the advertisement, two women portrayed tennis sports wear, which of course can show clearly whether or not their skin white. Let us look at the meaning of the advertisement below.

3.1.1Ideational Meaning

To view the ideational meaning (which I call the meanings here in after idea), can be seen through the component situation in the ad. As noted earlier, field, component situation in the sense that this is a field of discourse refers to what happened and the nature of social action that occurred, particularly participants answered questions about what is included in it, can be seen from the features of the language. Her playing better ..., her face looked whiter ..., if we look at the sentence, participants are brown-skinned women (black model) and white women. Ad maker here is the seller who has sold significance, whereas the television audience is expected buyers purchase products Ponds. In fact, participants targeted sellers are white women, because actually ... her face looks whiter ..., aimed at women who already have a white pigment. Furthermore, the meaning of the idea should be able to answer the talk about whether the discourse (Renkema, 2004: 47). In the context of tennis version Ponds ads, the ads talk about the product called *Ponds Moisturizer* and *Facial Foam*, which contains vitamin B3. So, there are two products you want to sell. The first kind of moisturizer to use after a shower or type of face moisturizer (*Moisturizer Ponds*), the second type of cleanser or soap after the move. This ad is to sell both products simultaneously saying that women should use soap before applying moisturizer, because the function of *Ponds Facial Foam*, which contains vitamin B3 is helping *Ponds Mousturizer* to seep into the

digilib.uinsby.ac.id digilib.uinsby.ac.id digilib.uinsby.ac.id digilib.uinsby.ac.id digilib.uinsby.ac.id digilib.uinsby.ac.id digilib.uinsby.ac.id

skin to appear whiter. The first step to the whiter skin ... which is actually *Ponds White Beauty Facial Foam.*

3.1.2Interpersonal Meaning

Let us consider the example (1) below. (1) ..., (ad narrator) because she was wearing *Ponds Moisturizer* and *Facial Foam*, which contain Vitamin B3 to help *Ponds Mousturizer* more absorbed into the skin to appear more white. The first step to whiter skin ... *Ponds White Beauty Facial Foam*. To view the interpersonal meaning, we can see the Tenor as a discourse that refers to who is taking part in the discourse, the nature of the participants, referring to the status and role in the discourse (Renkema, 2004: 46). Tenor describes the relationship that exists between participants. How to analyze it, it can be seen through the "power" and "a social status" participants, through the vertical relationship (low high social status), and horizontal relationships (far or close solidarity). The narrator of the ad on the example of speech (1) on television, we can see that advertising through television producers have "power" in communicating the message, so the speech narrator looks very effective advertisement. Television gives the image which is processed into raw materials marketing, giving television viewers information, especially the target, that target *the Ponds* will be white, and the white will be "beautiful" "*Ponds Moisturizer* and *Facial Foam,* which contain Vitamin B3 for *Ponds Mousturizer* more help soak into the skin to appear whiter ". Television via advertising *Ponds* has a major role in treating impressions as a commodity. It has to rely on advertising as a revenue source *Ponds* biggest fund (possibility), and serves as the commercial institutions that support the main idea of capitalism (selling all kinds of products *Ponds*) to conceptualize the production and reproduction. That is, *Ponds* do not provide information to consumers in order to make the best choice, but promote their own products in a "beautiful", with the memorable slogan viewers that the initial skin look whiter, namely *Ponds White Beauty Facial Foam.*

3.1.3Textual Meaning

Mode refers to the part where the language plays in it and for what participants hope to do the language in the situation. Mode is the arrangement of text, status and functions in a context, including the channel (oral, written, or a combination of both) and also rhetorical mode (Renkema, 2004: 47). In short, it is talking about the mode shapes (superstructures), the purpose and function.

Ponds advertising language version of tennis showed hope advertising producers as sellers. Manufacturers suggest that every woman who buys and uses *Ponds* will make skin more white, whiter and whiter. The word "white" is repeated several times, so that having the intended emphasis to the perception of the viewer (the target) that this face whitening products really "powerful" to whiten skin. The presence of advertisements on

digilib.uinsby.ac.id digilib.uinsby.ac.id digilib.uinsby.ac.id digilib.uinsby.ac.id digilib.uinsby.ac.id digilib.uinsby.ac.id digilib.uinsby.ac.id

television Ponds is a bit much to change the lives of people (women who wear Ponds). First, this advertisement wearer cultivate the desire for a "white" Save the advertisement, because white means that "beautiful". This means that many women are motivated to follow what they see on television, such as using *Ponds Facial Foam* first, then use *Ponds Mouisturizer*, giving rise to a consumerist culture. Moreover, the nature of television that only the ore one direction, so that the women will be forced to seek external information, such as whether *Ponds* do not disturb the skin health: but it can only be done by certain circles that in fact have "money" and educated; assuming seek information about Ponds skin whitening products. The second advertisement that is going to analyze is advertisement of Ponds "walking in the crowd version"

3.2 Advertisement of Ponds "walking in the crowd version"

Ponds advertisement illustrates two women, which were walking in the crowd. They walked the opposite direction. One of them has a white skin (I called a white models). Women who has a black skin (then I called a black model) view of the distant white woman's skin and automatically see their own skin. Two women in these advertisement are not issued speech at all, but the white model of "action" provides products *Ponds* when they met. Narrator of the advertisement says:

digilib.uinsby.ac.id digilib.uinsby.ac.id digilib.uinsby.ac.id digilib.uinsby.ac.id digilib.uinsby.ac.id digilib.uinsby.ac.id digilib.uinsby.ac.id

(2) *Ngapain takut belang, sekarang ada Ponds Body Lotion Baru yang melengkapi putihmu sampai ke ujung kaki*.(Why do you fear of stripes, there is now a *New Ponds Body Lotion* that complement your white until Valentine foot)

We will see the linguitics message below. Here is the meaning of the idea, interpersonal and textual in this advertisement

3.2.1Ideational meaning

The second advertisement in the series *Ponds* advertisement featured two women who were walking direction. Almost the same as the previous advertisements, advertisements running in the crowd *Ponds* version also uses two figures opposite color, one black (according to researcher brown) and one white. The depiction of this discourse can be seen through the speech (2) spoken by the narrator advertisement, which shows that if the model wants white black white model that provides "Ponds", then he can use *New Ponds Body Lotion*, which according to the manufacturer can make the white models black in advertising and consumers (TV viewers) to toe. As noted earlier, the meaning of the idea should be able to answer the talk about whether the discourse (Renkema, 2004: 47). First, the advertisement is actually just talking about the latest products from the Ponds, which is for women who are skinned striped, meaning "white" uneven skin to toe. This new product is trying to lure viewers to use *Ponds Body Lotion*, so "white" can come from face to toe, and if white skin evenly to toe, the women were being "beautiful". Second, it is talking about the comparison between white women and stripes, manufacturers indicate that white women get more "attention" from the Adam (the picture shows that the "glance" and "look" more white models and black models are not there is a "glance" or "see"), so that the benefits of the product in treating female beauty is really highlighted by advertisers, with the assumption that women taking care of themselves to attract the opposite sex.

3.2.2Interpersonal meaning

Renkema (2004: 47) says that the meaning of interpersonal discourse related to the tenor, the who, the status and role of the participants, and can be recognized by the participants in the discourse of how to use language to act. For example, the use of the type of job can mean a person has "the strength (power)" to give instruction. Language

digilib.uinsby.ac.id digilib.uinsby.ac.id digilib.uinsby.ac.id digilib.uinsby.ac.id digilib.uinsby.ac.id digilib.uinsby.ac.id digilib.uinsby.ac.id

version of the advertisement makers running out in the crowd is informative as well as persuasive "Why fear stripes, there is now a *New Ponds Body Lotion* that complement your white until Valentine foot". Manufacturer of advertising on television to provide information that Ponds had a new product, as well as persuade the creative language "fear doing stripes", to show that "beautiful" is that having white skin evenness.

3.2.3Textul Meaning

The last aspect of discourse is related to the meaning of textual mode (mode). Textual meaning is meant here is the organization of the content elements within a larger structure, for example, where the perspective on a topic related to the technique of putting the information in a prominent place. Here, *Ponds* advertisement put new information about a new product that can whiten skin to toe, which is kind of *Ponds Body Lotion*. This means, it appears that manufacturers impose *Ponds* consumption as much as possible to television audiences with its main purpose, propaganda products. Manufacturers *Ponds* advertisement encourage consumers to buy as many products *Ponds* with the assumption that if many consumers buy the product, then the greater the benefits. Consumerism propagated by advertising this *Ponds* up to the level of imaging that ownership of a product "Ponds" equivalent beauty itself. That is, when women do not buy the product, the person is imaged as a woman who does not have the beauty "product version *Ponds"*.

An Effort to encourage consumers to buy products made by the method *Ponds* dishonest and deceptive because even commercials that are used are already white and "beautiful" by the standards of beauty of Indonesia (tall and slender, long black hair, white face, "beautiful"), and because the logic, which may be the product with the price ranging from Rp. 10.000, - up to Rp.12.000, - can whiten skin in as few as 6 weeks. This is where manufacturers *Ponds* serve advertisements to spread the idea to the public that (the women were black or brown) products *Ponds* need to be beautiful, it is a public lie. Unfortunately, for the sake of mutual relations, propaganda carried out by the manufacturer *Ponds* advertisement is fully supported by television; evidenced by the presence of advertising airtime *Ponds* every advertisement. Therefore, the television plays a major role in distorting the facts in order to make consumers interested in *Ponds* advertisement.

4.Conclusion

Ponds advertisement is a form of communication which full of meaning. The form and function of meaning in advertising *Ponds White Beauty Facial Foam* and *Ponds Body Lotion* on television portrayed through ideas, language ads, and purpose. "Beautiful" in

digilib.uinsby.ac.id digilib.uinsby.ac.id digilib.uinsby.ac.id digilib.uinsby.ac.id digilib.uinsby.ac.id digilib.uinsby.ac.id digilib.uinsby.ac.id

this ad are women who have white skin and use all kinds of products *Ponds*. They are good moisturizer, cleanser, moisturizer and a flattened body to toe white. Manufacturers build an image to form a consumer (especially women) living in the physical standards. Television via advertising Ponds treat as a commodity, and serves as a commercial institution that supports the main idea of capitalism (selling all kinds of products Ponds) to conceptualize the production and reproduction. That is, Ponds do not provide information to consumers in order to make the best choice, but promote their own products in a "beautiful", with the memorable slogan viewers that the first step to whiter skin, the product; *Ponds White Beauty Facial Foam* and *Ponds Body Lotion*. *Ponds* advertising functions that contribute to the community to spread the idea that women were black or dark brown really need *Ponds* products in order to be beautiful, and television play a major role in distorting the facts in order to make consumers interested in advertising *Ponds.*

Based on the above explanation, the meaning and definition of "beautiful" according to *Ponds White Beauty Facial Foam* advertisement,and *Foam Body Lotion* advertisement is only restricted to physical standards, that is a woman which is beautiful is a woman who has a white skin, and she will be beautiful, and the one who is beautiful means powerful. It is done from all aspect of *Ponds* advertisement (Ideational meaning, interpersonal meaning, and textual meaning), where all the meaning of those advertisement take "benefit" from tendency features, which is attributed to every women, especially Indonesian women who always try to be beautiful. It is really clear that the word magic "beautiful" identical to women. Almost every women need a confession for being beauty. To be beautiful physically happen on P*onds* advertisement.Women representation that appear on the *Ponds* advertisement does not show the representation of Islamic woman where the inner beauty is beauty from body and spiritual. Islamic women can be beauty physically and spiritual, where Islam see the beauty top of a woman is when she obey and submit to Allah SWT, and clearly the Islamic women does not 'live' in the standard of beauty from images that bombarded by advertisement of *Ponds White Beauty Facial Foam,* and *Ponds Body Lotion.* In conclusion, Islamic women define "beautiful" means she does not agree to the meaning resulted from *Ponds White Beauty Facial Foam* advertisement, and absolutely she does not agree also to the meaning resulted from *Ponds Body Lotion* advertisement. The women representation in these advertisement are only capitalisms product.

digilib.uinsby.ac.id digilib.uinsby.ac.id digilib.uinsby.ac.id digilib.uinsby.ac.id digilib.uinsby.ac.id digilib.uinsby.ac.id digilib.uinsby.ac.id

References

Aminuddin. 2002. ***Analisis wacana dari linguistik sampai dekonstruksi.*** Yogyakarta: Kanal.

Bungin Burhan. 2000. ***Imaji Media Massa.*** Yogyakarta: Jendela

Cook, Guy. 2001. ***The Discourse of Advertising.*** London: Routledge.

Krugman, Dean M., Reid, Leonard N. 1994. ***Advertising: It's Role in Modern Marketing.*** Orlando: The Dryden Press, Harcourt Brace College Publishers.

Piliang, Yasraf Amir. 1999. ***Hiperrealitas kebudayaan.*** Yogyakarta. LkiS.

Purwantari, B. I. 1998. ***Mencipta Makna tentang Perempuan lewat Iklan.*** Jurnal Perempuan. Edisi 06. Februari-April

Putih itu cantik, Tidak Putih Juga cantik (25 Februari 2001). Kompas

Renkema, J. 2004. ***Discourse Studies. An Introductory Textbook***. Amsterdam/Philadelphia: John Benjamins.

YLKI: Krim Pemutih Mengandung Merkuri (14 Mei 2001). Kompas.

digilib.uinsby.ac.id digilib.uinsby.ac.id digilib.uinsby.ac.id digilib.uinsby.ac.id digilib.uinsby.ac.id digilib.uinsby.ac.id digilib.uinsby.ac.id